www.reelschematic.com

Daiwa
COMMITTED TO TOTAL QUALITY

SPINNING REEL GS1655/2055

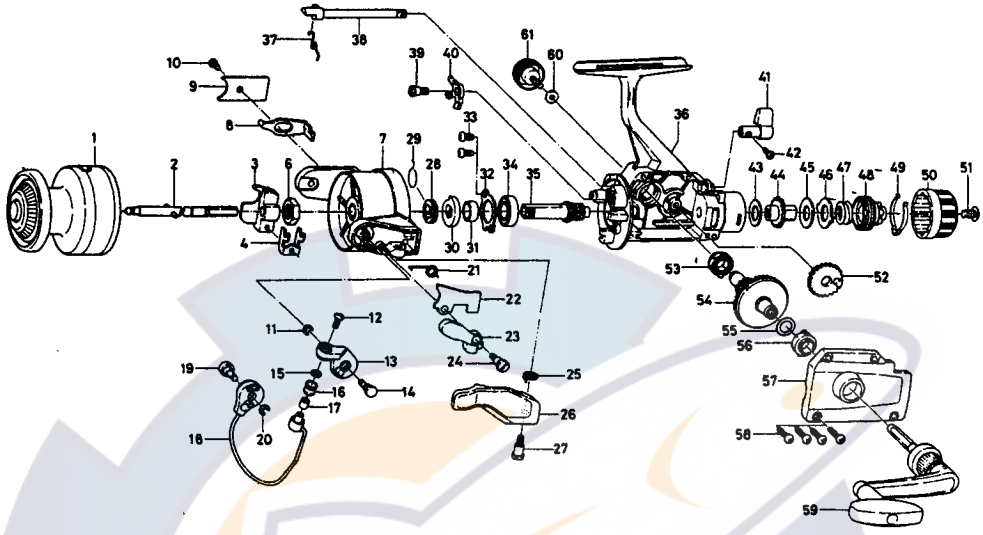

Key No.	Parts No.	Parts Name
1	E08-6502	Spool*
2	B83-9801	Main shaft
3	E08-7801	Oscillating slider
4	B93-7202	Oscillating slider retainer
6	B10-5701	Rotor nut
7	B82-1901	Rotor
8	B83-6701	Bail trip lever
9	B76-9703	Bail trip cover
10	B83-4402	Bail trip cover screw
11	320-5901	Bail arm screw retainer
12	B67-9302	Line roller screw
13	B67-4601	Bail arm
14	B83-3801	Bail arm screw
15	B55-4301	Line roller washer A
16	250-3921	Line roller
17	B45-1501	Line roller bushing
18	B83-6501	Bail
19	B83-4201	Bail trip cam screw
20	320-5901	Bail trip cam screw retainer
21	B76-9101	Bail spring
22	B83-6401	Bail spring cover
23	B76-9301	Trigger plate
24	B68-8801	Bail spring cover screw
25	B67-5201	Trigger spring
26	B67-5105	Trigger lever
27	B68-8802	Trigger screw
28	B68-6401	Spring holder
29	145-0901	Anti-reverse pawl spring
30	B67-4301	Anti-reverse ratchet
31	B83-6201	Spacing sleeve
32	B35-6301	Bearing retainer
33	B83-4402	Bearing retainer screw
34	636-6011	Ball bearing
35	B83-6101	Pinion gear

Key No.	Parts No.	Parts Name
36	E08-5801	Body
37	144-0321	Anti-reverse cam spring
38	B83-6001	Anti-reverse cam
39	B83-6301	Anti-reverse pawl screw
40	B74-5501	Anti-reverse pawl
41	E08-6101	Anti-reverse lever
42	B12-8201	Anti-reverse lever screw
43	B46-9504	Drag washer A
44	B76-9803	Click gear
45	373-3710	Drag washer B
46	B83-9501	Eared washer
47	B98-2901	Drag coil spring
48	B77-0004	Drag screw
49	B77-0301	Drag washer spring
50	B83-9604	Drag knob
51	352-1105	Drag knob spring screw
52	B74-3701	Oscillating gear
53	B84-3901	Bushing
54	B83-6801	Drive gear
55	373-7800	Drive gear washer
56	B84-3901	Bushing
57	E08-6201	Side cover
58	B83-5002	Side cover screw
59	E00-2502	Handle
60	B92-4902	Handle lock washer
61	B92-5001	Handle lock screw

GS2055 Special Parts

1	E08-7402	Spool*
7	B82-2101	Rotor
8	B83-7301	Bail trip lever
18	B84-0201	Bail
36	E08-5802	Body*
57	E08-6203	Side cover*
59	E00-2802	Handle

* 1986 Reel Model